MOLEAD | CLING

LIMITED SPACE INFINITE CARE

EZDD-04-J

Heat Pump Electric Air Conditioner

Energy Saving | Safety | Light Weight | Comfortable | Recyclable | Intelligent

www.clingac.com

marketing@clingac.com +86 371 8533 5504 Zhengzhou, Henan ,China

EZDD-04-J

Technical Data

Cooling Capacity(kcal/h)	15000
Heating Capacity(kcal/h)	14000
Battery Cooling Capacity Driving/Charging (kW)	3/5
Evaporator Airflow(m^3/h)	4000(4Pcs)
Condenser Airflow(m^3/h)	6000(3Pcs)
Refrigerant	R407C
Weight(kg)	195
Size(mm) L*W*H	2700*1630*240
Application(M)	6-7

- The battery air conditioner and the vehicle air conditioner is integrated, resulting into the cost reduction of 30% and the weight reduction of 20%.
- The requirements of air conditioning heating and battery cooling in low temperature environment are met.
- Two-way electronic expansion valve is precisely regulated, coupled with PID intelligent control, and evenly distributes the cooling capacity inside the vehicle and battery side.

IATF 16949 | EMC Grade III | E-MARK

Drawing

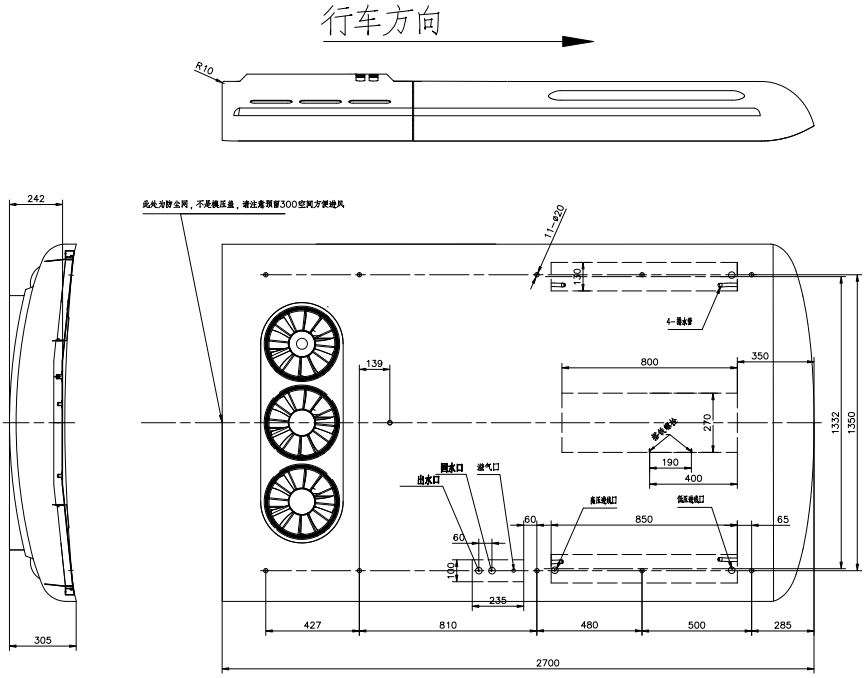

Van | City Bus | Intercity Bus | Coach | School Bus